名　称 (Part Name)：　轴流风机　Axial Fan

型　号(Model No.)：　YWF.A4T-560B-5DIAP0

顾客代码(Customer Code)：

版　次(Version No.)：　A/0

编　制 (Prepared)：

校　对 (Checked)：

审　核 (Reviewed)：

批　准 (Approved)：

客户确认/日期（Customer Approval/Date）：

换版记录 Description of Revision

版本号 No.	换版原因 Notes & Remarks	换版内容 Contents	修订人 Revised by	日期 Date

1.0 概述/ Introduction

本规格书主要描述了产品标准、使用环境、技术要求等；

This specification describes the standards, operating environment, and technical requirements of the product.

2.0 产品符合的标准要求/ Standards & Requirements of The Product Followed

2.1 本产品符合的标准/ Standards of the product followed

2.1.1 GB12350《小功率电动机的安全要求》

GB12350 Safety Requirments of Small Power Motors

2.1.2 EN60335-1《家电和类似用途电器的安全要求》

EN60335-1 Safety Requirements of Household and Similar Electrical Appliances

2.2 本产品通过 CCC、CE认证/ The fan is CCC, CE approved

2.3 本产品材料符合RoHS要求/ Materials are RoHS compliant

3.0 机械要求/ Mechanical Requirements

3.1 外形图/ Dimensional drawing

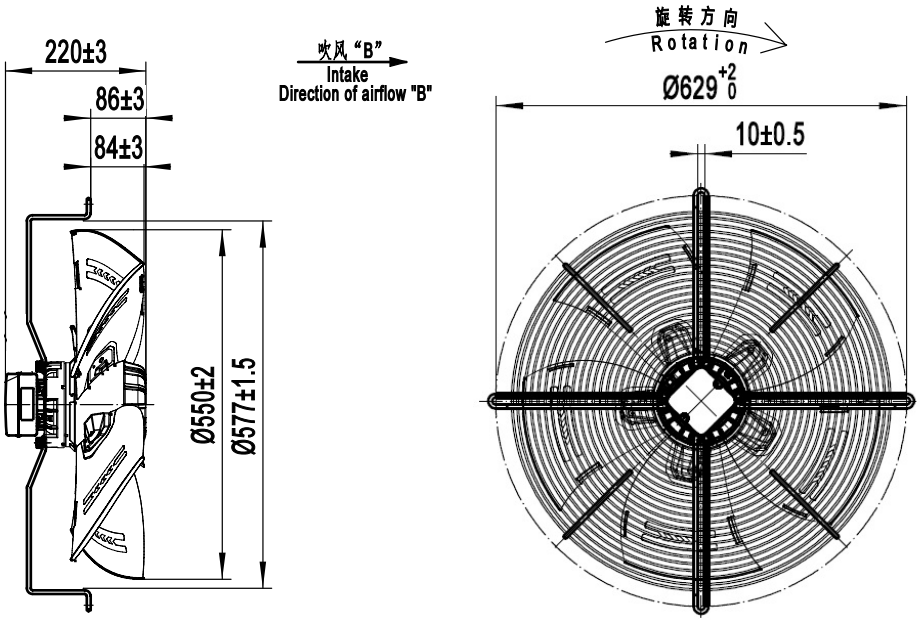

3.2 风机材质/ Fan Materials

3.2.1 风叶材质/ Material of blade

□ SPCC / 冷轧钢板 □Aluminium alloy / 铝合金 ■ Plastics / 塑料

□ Stainless Steel / 不锈钢 □ Others / 其它

3.2.2 电机磁材/ Materials of motor magnets

高强度漆包铜线 QZ-2 180°C/ High strength enamelled wire QZ-2 180°C

硅钢片/ Silicon Steel

3.2.3 轴承/ Bearing

免维护滚珠球轴承/ Maintenance free ball bearing

3.3 电机型号/ Motor model number: YWM137-070-24-4T-A36 30

3.4 平衡/ Balancing

风机在额定电压和频率下运转时，每个端面动平衡精度不低于G4.0，符合标准JB/T9101；

The residual unbalance weight is less than the permit value of G4.0 rating (balancing precision grade, according to the standard of JB/T9101) when the fan is running at rated voltage and frequency;

3.5 振动/ Vibration

风机振动速度有效值按照JB/T8689标准规定/Vibrating speed virtual value of fans accord with JB/T8689

3.6 产品净重/ Net weight: 13 kg

3.7 风机寿命/ Fan life

估算值40000小时(在额定电压、环境温度为40℃、额定负载运转时);

The designed lifespan of the fan is 40000 hours assuming the fan is running at rated voltage, rated load and 40 degrees C environmental temperature;

4.0 风机性能/ Fan Performance

4.1 电压范围/ Voltage range

风机的额定电压为 400V，可运行的电压范围是 360～440V;

The rated voltage of the fan is 400V, and it is applicable in the range of 360～440V;

4.2 性能参数/ Performance data

额定电压 Voltage [V]	频率 Frequency [Hz]	电容 Capacitor [uF](±5%)	输入电流 Current Draw [A](±10%)	输入功率 Power Input [W](±10%)	转速 Speed [r/min](±10%)	风量 Air Flow @ 0 Pa [m^3/h](±10%)	噪音(最大)* Noise Level [Lp dB(A)] Max	数据状态 Type of Data Definition
3～400	50	\	1.75	900	1350	12000	74	fa

数据状态: fa: 放空状态(带风轮自由运行）；ml:最大负载点；me:最大效率点；cs:客户要求；cu:客户机箱中

Definition of Data： fa - Running at free air ml - Max load me - Max efficiency cs - Customer request cu - Customer unit

※ *Subject to alterations.*

噪音测定标准：ISO 13347《工业风扇.标准化实验室条件下风扇声功率级的测定》

Standard of noise test: ISO 13347 *Determination of fan sound power levels under standardized laboratory conditions*

4.3 铭牌/ LABEL (选中请打勾/ Please tick at your choice)

☐ 中文/Chinese

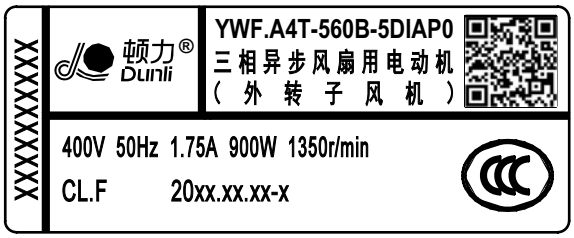

☐ 英文/English

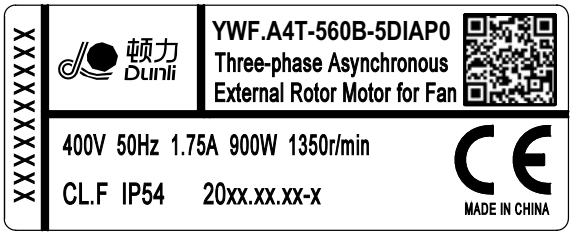

4.4 接线图/ Wiring diagram (选中请打勾/ Please tick at your choice)

☐ 中文/Chinese

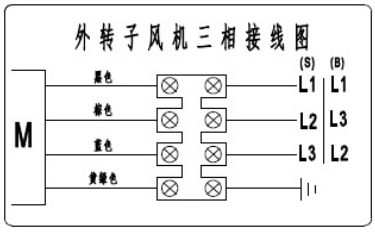

☐ 英文/English

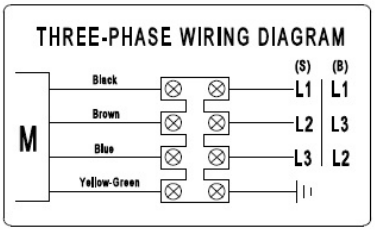

4.5 风量特性曲线/ Air performance curve(s)

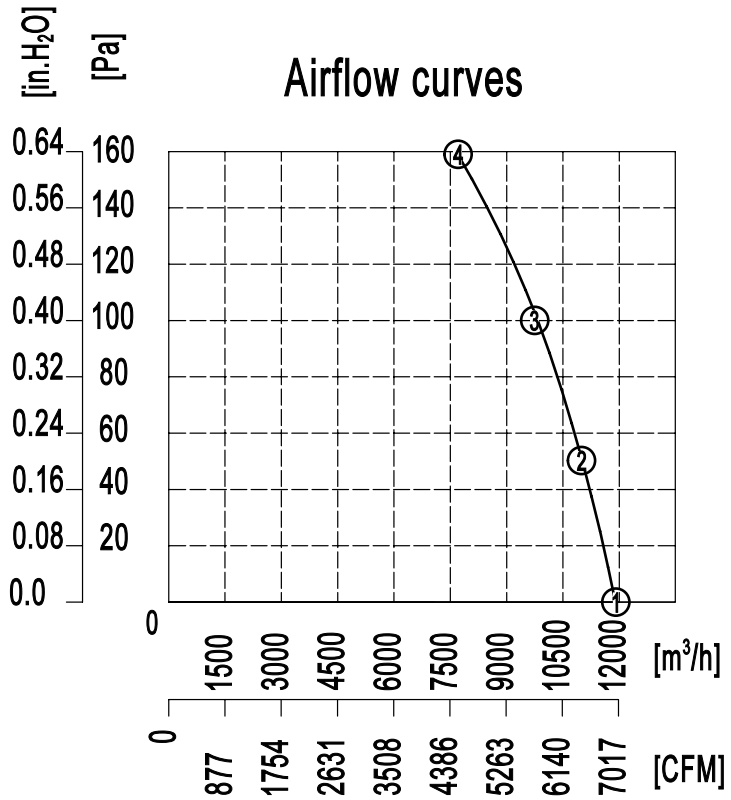

测试值/ Measured values

序号	电压	频率	转速	输入功率	静压	流量
No.	V	Hz	r/min	W	Pa	m3/h
1	400	50	1370	760	0	11830
2	400	50	1350	845	50	10880
3	400	50	1340	910	100	9845
4	400	50	1315	1025	160	7950

5.0 电气要求/ Electrical Reqirements

5.1 保护/ Protection

电机有热保护功能, 断开温度:150—160℃,复位温度:90—120℃;

This motor is equipped with the overheated protection function, cut off temperature is between 150—160℃ and reset temperature is between 90—120 ℃.

5.2 防护等级/ Level of protection: IP54

5.3 绝缘等级/ Insulation class: F

5.4 泄漏电流/ Leakage current: According to GB 12350

5.5 工作制/ Type of Application: S1

5.6 安装方式/ Installation Mode:

■ 水平向下/ Horizontal DN ■ 垂直/ Vertical

□ 特殊要求需与厂家联系/ Special request, please contact the manufacturer

5.7 调速方式/ Mode of speed regulation:

□斩波/ PWM □变频/ VFD □抽头/ By Wiring □电容/ Capacitor □无极调速/ Stepless ■无/ NA

6.0 符合ISO9001质量体系认证

Product is built according to the ISO9001 Quality Management System

7.0 使用和存储环境/ Operating & Storing Environmental Requirements

7.1 使用环境/ Operating environmental requirements

使用温度范围/ Operating temperature range: -30℃～+60℃

使用湿度范围/ Operating humidity range: 0%～95% RH

(要求环境无凝霜或结露/ No Rime or Condensation with the Ambient.)

海拔高度/ Operating altitude: ≤1000m （若海拔高度>1000m，需参照GB/T 755 标准)

(If the altitude is higher than 1000m, please refer to GB/T 755)

大气压范围/ Atmospheric pressure Range: 80～110Kpa

7.2 运输/贮存环境要求/ Tansport/Storing environmental requirements

运输/贮存温度范围：-40℃～+80℃

Temperature range of transportation/storage: -40℃ ～ +80℃

运输和贮存湿度范围: 0%～75% RH

Humidity range of transportation and storage: 0% ～ 75% RH

8.0 包装和标识/ Packaging & Marks

8.1 包装/ Packaging: 纸箱包装/ Carton packaging

8.2 标识/ Marks

制造商名称、产品型号、重量、尺寸等;

Mark with the name of manufacturer, fan model number, date of production, weight, dimensions, etc.

9.0 附件/ Other Requirements On Accessories

9.1 电容/ Capacitor

□带/ Yes ■ 不带/ No □ 根据销售订单配备/ As per sales' requirements

9.2 连接件要求/ Connector

连接器/ Connector(□ 有/ Yes ■ 没有/ No) 型号/ Model:

端子/ Terminal (□ 有/ Yes ■ 没有/ No) 型号/ Model:

10.0 警示与说明/ Warnings &Instructions:

10.1 本产品不适用于有明显破坏绝缘的气体或蒸汽的环境中；不适用具有甲烷混合气体和煤尘爆炸危险的煤矿井下；
Can not be used for these places where have corrosive gas or steam exsiting. Can not be used in coal mine wells where there are methane mixed gas and coal that may cause dust explosion hazard.

10. 2 产品内部使用球轴承，避免转子受到冲击， 不适用于有强烈冲击、振动的地方；
The bearings used are ball bearing. Please prevent the rotor from strike and impact. Should be stored at and used for these places where have no strong impact force and shock;

10.3 本产品请专业人员按规格书或接线图连接线路,安装时确保风机转动无卡滞现象；风机启动时，观察风机转向是否与标识一致；
Please do connections by professionals according to the wire diagram or this product specification. Please check to make sure there's no blocking with the fan before installating; Please check the rotation of the fan to make sure it's running the correct direction.

10.4 产品通电时请勿接触高压线路，防止触电，要求用户风机设备可靠接地；
Please do not touch any of the high voltage line while the product is powered on. Customer fan unit should connect to ground well.

10.5 产品需要通风冷却，使用时请考虑周边通风条件，并防止烫伤；
In order to cool down the motor part, please use this product under a well-ventilated condition and beware of avoiding being scalded during operation.

10.6 产品运转时请勿靠近旋转部件，并防止异物进入内部；
Please keep away from rotating parts while the product is running, and no exoteric matter getting into inside of the product.

10.7 无对电机漆包线寿命损坏之波形输入, 防止冲击电压破坏产品；
No these wave inputs allowed which might reduce enameled, in order to prevent the product from damage by the impact voltage.

10.10 移动产品时请勿拉扯线束，避免线路断裂或绝缘受损；
In order to avoid the circuit from breakdown and/or insulation from damage, please do not pull the wire harnesses while moving the product.

10.11 按本规格书中的参数评价产品，若工作参数发生变更，请与本公司联系；
Please use this product under the conditions specified on this specification, and please contact with us if your application is not in the applied conditions;

10.12 产品自购买之日起，质保期为壹年 (具体以订货合同为准)；
The guarantee time of the products is normally one (1) year (accordance to contract or purchase order).

11.0 其它/ Others

11.1 本产品的知识产权属于本公司 在本产品的使用上不会发生专利争议问题；如果应用本产品形成有关新的产品或新方法或新的技术方案造成的专利侵权，本公司不予保证；
We have intellectual rights on this product. We are not responsible for any torta/patent disputes caused by using this product on other products/technical solutions.

11.2 未经本公司许可不得将本产品规格书泄漏给其它任何第三方；
It should be assured that this specification can not be revealed to any third party without the consent of our corporation.

12.0 特别提示: 若未按本规格书之要求和未按警示与说明所列情形违规操作，由此引起的质量问题与事故由用户自行承担；
Attentions: If customer didn't comply with the stipulations of this specification or the listed warnings and instructions, customer should undertake the due obligation for all the quality issues and accidents.

客户确认/日期（Customer Approval/Date）：